EXPERIMENT 3

Arya Basak

23MS233

AIM:

Study of OPerational AMPlifier (OPAMP) as inverting and non-inverting amplifier and its applications as adder and subtractor.

ELECTRONIC COMPONENTS REQUIRED:

1. Power supply, 2 Nos: ± 15 V, 0 ~ +5 V (use pot for variable voltage from fixed if not available)
2. Rf = 2.2 KΩ, 10 KΩ, 22 KΩ, one each 3 Nos
3. Ri = 1.0 KΩ , 4 Nos
4. 1.0 kΩ Potentiometer, 1.0 W, 2 Nos
5. OPAMP LM741 = 1 No
6. Breadboard = 1 No
7. Two DT-830D multi-meters for voltage measurements.
8. Single strand wires = 6 - 8 Nos.

THEORY:

An **operational amplifier**, which is often called an **op-amp**, is a DC-coupled high-gain electronic voltage amplifier with differential inputs and, usually, a single output. High input impedance at the input terminals (ideally infinite) and low output impedance (ideally zero) are important typical characteristics.

Circuit Notation:

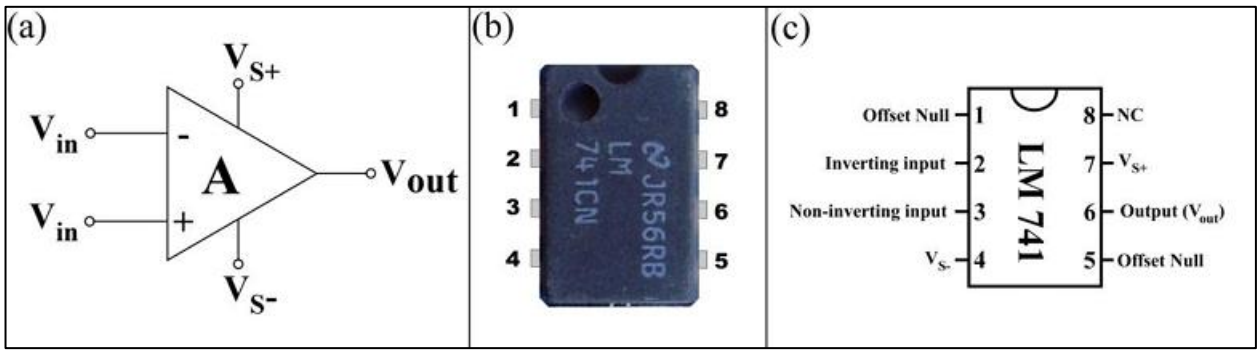

Figure 1: (a) Symbolic representation of Op-Amp (b) Real 8-pin OPAMP showing how to count pin numbers (c) Detail pin-out configuration of LM 741 OPAMP.

The circuit symbol for an op-amp is shown in Fig 1(a), where:

- $V_{in}+$: Non-inverting input voltage
- $V_{in}-$: Inverting input voltage
- V_{out}: Output voltage
- V_{S+}: positive power supply = + 15 V
- V_{S-}: negative power supply = - 15 V

The power supply pins (V_{S+} and V_{S-}) can be labeled in different ways. Despite different labeling, the function remains the same - to provide additional power for amplification of signal. Often these pins are left out of the diagram for clarity, and the power configuration is described or assumed from the circuit. The standard pin diagram of LM 741 Op-Amp is also shown in Fig 1(c).

Properties of OPAMP 741:

1. The input stage of an OPAMP is a differential amplifier (DA) and the output stage is typically a class AB push-pull emitter follower amplifier.
2. The internal stages of an OPAMP are direct-coupled i.e. no coupling capacitors are used. The direct coupling allows the OPAMP to amplify DC as well as AC signals.
3. An OPAMP has very high input impedance (ideally infinite) and very low output impedance (ideally zero). The effect of high input impedance is that the amplifier will draw a very small current (ideally zero) from the signal source. The effect of very low output impedance is that the amplifier will provide a constant output voltage independent of current drawn from the source.
4. An OPAMP has very high "open-loop voltage gain" (ideally infinite); typically more than 10^5 or 10^6.
5. The OPAMP is almost always operated with negative feedback.

Application of OPAMP 741: The OPAMPs have many practical applications. The OPAMP can be connected in a large number of circuits to provide various operating characteristics.

1. OPAMP as an Inverting Amplifier

An operational amplifier can be operated as an inverting amplifier as shown in **Figure 2**. Biasing supply to OPAMP, $\mathbf{V_{S\pm} = \pm 15\ V}$ must be applied. Variable power supply should be used to tune V_{in}. If variable voltage is not available, then 1K potentiometer can be used from fixed voltage to get variable voltage.

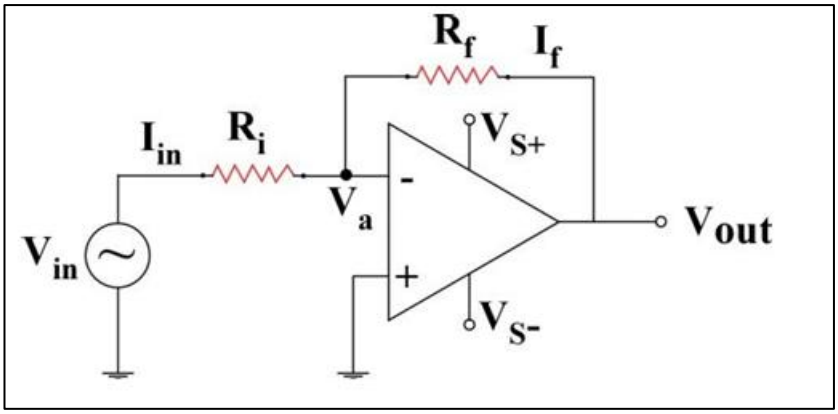

Figure 2: Op-Amp as an Inverting Amplifier

Inverting Voltage Gain:

$$A = \frac{V_{out}}{V_{in}} = -\frac{R_f}{R_i}$$

OBSERVATIONS:

Table 1: Inverting Amplifier Configuration

Sl. No.	V_{in}	V_{out}	Measured Gain (V_{in}/V_{out})	Average	Theoretical Gain (R_f/R_i)
R_f = 2.2; R_i = 1					
1	2	-4.63	-2.315	-2.2274	-2.2
2	4	-9	-2.25		
3	6	-12.52	-2.087		
4	3	-6.7	-2.233		
5	5	-11.26	-2.252		
R_f = 1; R_i = 2.2					
1	1	-0.49	-0.49	-0.471	-0.455
2	2	-0.94	-0.47		
3	3	-1.41	-0.47		
4	4	-1.86	-0.465		
5	5	-2.3	-0.46		

R_f = 10; R_i = 1					
1	0.2	-2.58	-12.9	-11.6454	-10
2	0.4	-4.71	-11.775		
3	0.6	-6.58	-10.967		
4	0.8	-9.5	-11.875		
5	1	-10.71	-10.71		
R_f = 10; R_i = 2.2					
1	1	-4.86	-4.86	-4.9038	-4.545
2	0.5	-2.7	-5.4		
3	1.5	-7.28	-4.853		
4	2	-9.38	-4.69		
5	2.5	-11.79	-4.716		

As can be seen from the table, the measured gain and the theoretical gain of the amplifier are quite close to each other, validating the **inverting amplifier gain** formula.

2. OPAMP as a Non-inverting Amplifier

An operational amplifier can be operated as a non-inverting amplifier as shown in the **Figure 3**. Variable power supply should be used to tune V_{in}. If variable voltage is not available, then 1K potentiometer can be used from fixed voltage to get variable voltage.

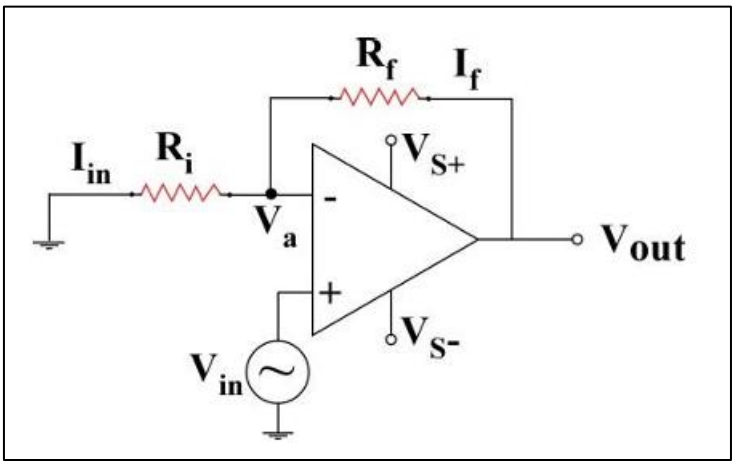

Figure 3: Op-Amp as a Non-Inverting Amplifier

Non-Inverting Voltage Gain:

$$A = \frac{V_{out}}{V_{in}} = 1 + \frac{R_f}{R_i}$$

OBSERVATIONS:

Table 2: Non-Inverting Amplifier Configuration

Sl. No.	V_{in}	V_{out}	Measured Gain (V_{in}/V_{out})	Average	Theoretical Gain ($1 + R_f/R_i$)
R_f = 2.2; R_i = 1					
1	1	3.48	3.48	3.4632	3.2
2	0.5	1.88	3.76		
3	1.5	5.06	3.373		
4	2	6.82	3.41		
5	3	9.88	3.293		
R_f = 1; R_i = 2.2					
1	1	1.58	1.58	1.5136	1.455
2	2	3.07	1.535		
3	3	4.46	1.487		
4	4	5.99	1.498		
5	5	7.34	1.468		
R_f = 10; R_i = 1					
1	0.2	3.28	16.4	13.2522	11
2	0.4	5.18	12.95		
3	0.6	7.85	13.083		
4	0.8	9.59	11.988		
5	1	11.84	11.84		
R_f = 10; R_i = 2.2					

1	1	6.06	6.06	5.9956	5.545
2	0.5	3.33	6.66		
3	1.5	8.8	5.867		
4	2	11.43	5.715		
5	2.5	14.19	5.676		

As can be seen from the table, the measured gain and the theoretical gain of the amplifier are quite close to each other, validating the **non-inverting amplifier gain** formula.

3. OPAMP as an Adder

An OPAMP in an inverted amplifier configuration with two or three inputs can work as an adder circuit as shown in **Figure 4**. The output voltage of an adder amplifier is proportional to the negative of the algebraic sum of its input voltages. Thus, the output voltage is proportional to the algebraic sum of the input voltages. If variable voltage is not available then one can use 1K potentiometer from fixed voltage to get variable voltage. If **$R_f = R_1 = R_2 = R_3 = 1.0$ kΩ** then the output voltage is

$$V_{out} = -(V_1 + V_2 + V_3)$$

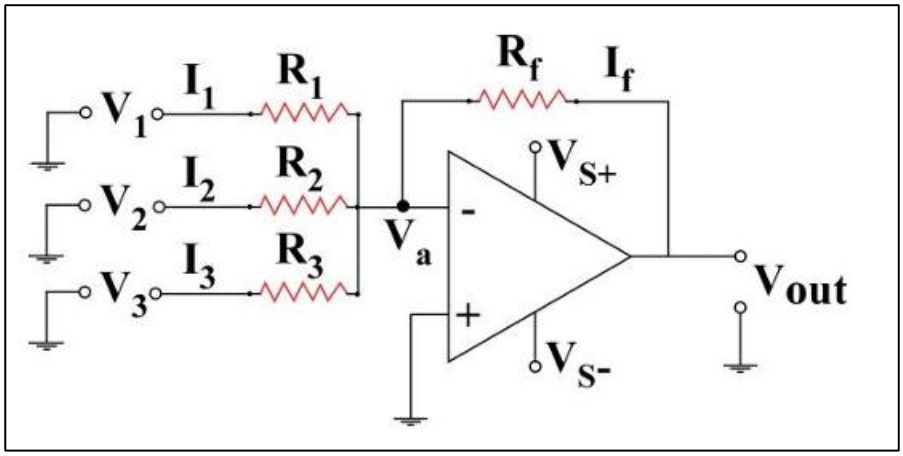

Figure 4: Op-Amp as an Adder

OBSERVATIONS:

Table 3: Adder Configuration

Sl. No.	V_1	V_2	V_3	V_{out} (Measured)	V_{out} (Theoretical)
1	4.4	2.19	1.3	-7.92	-7.89
2	4.4	2.42	1.3	-8.18	-8.12
3	4.4	2.62	1.3	-8.38	-8.32
4	4.4	2.62	2	-9.11	-9.02
5	4.4	2.64	2.5	-9.61	-9.54
6	4.7	2.64	2.5	-9.83	-9.84
7	5	2.64	2.5	-10.14	-10.14
8	5	2.81	2.5	-10.32	-10.31
9	5.2	2.91	2.5	-10.61	-10.61
10	5.2	3.1	2.5	-10.79	-10.8

As can be seen from the table, the measured output voltage and the theoretical output voltage of the adder are quite close to each other, validating the **adder output voltage** formula.

4. OPAMP as a Subtractor

An OPAMP can be used as a subtractor **(Figure 5)**, and it subtracts one signal from other. When resistors, **$R_1 = R_2 = R_3 = R_4 = 1.0$ kΩ** the circuit with OPAMP can be used as a subtractor. If variable voltage is not available then one can use 1K potentiometer from fixed voltage to get variable voltage.

$$\boxed{V_{out} = (V_2 - V_1)}$$

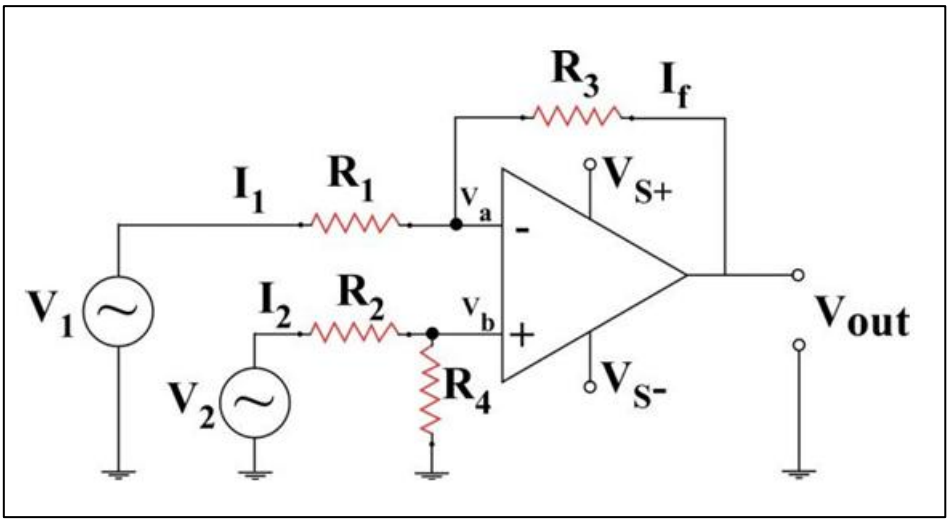

Figure 5: Op-Amp as a subtractor

OBSERVATIONS:

Table 4: Subtractor Configuration

Sl. No.	V_1	V_2	V_{out} (Measured)	V_{out} (Theoretical)
1	4.4	4.4	0	0
2	5	4.4	-0.58	-0.6
3	5.6	4.4	-1.21	-1.2
4	6.2	4.4	-1.76	-1.8
5	6.8	4.4	-2.32	-2.4
6	7.2	4.4	-2.77	-2.8
7	7.2	5	-2.2	-2.2
8	8	5	-3	-3
9	9	5	-3.98	-4
10	10	5	-5	-5

As can be seen from the table, the measured output voltage and the theoretical output voltage of the subtractor are quite close to each other, validating the **subtractor output voltage** formula.

CONCLUSION:

In this experiment, we have used Op-Amp as:

1. Inverting Amplifier
2. Non-Inverting Amplifier
3. Adder
4. Subtractor

We have measured the gain in case of inverting and non-inverting configuration and the output voltage in case of adder and subtractor. All the measured values are quite close to the theoretical values. Hence an Op-Amp can be used in the above-mentioned configurations. The theoretical formulas for gain and output voltage are also verified.

SOURCES OF ERROR:

1. The output of the OPAMP gets saturated if the input signal is too large (larger than $\pm 15V$).
2. Input offset voltage of Op-Amp (non-zero output even when input is zero) can cause deviations in measurement.
3. Mismatch in resistor values for adder and subtractor can deviate the measured output voltage from the theoretical voltage.
4. Loose or faulty breadboard connections or contact resistance in the breadboard can cause errors in measurement.
5. Heating of resistors or OPAMP during the conduction of the experiment changes their electrical characteristics.